ABSOLUTE TYPE
NAR-H
NAR-B Model

Hybrid Multi Turn Absolute Encoder

- Compact Design with Small Sizing of 39mm Diameter.
- The MR Sensors is Used to Count Up The Number of Multi Turn.

Model

NAR-□□□□-AD-05□□□-□□□-C□□

- Style: H : With cover; B : No cover(Option)
- Resolution: 11 : 11bit; 13 : 13bit; 17 : 17bit
- Style: No Indication : Single Turn; M : Multi Turn
- Hollow Shaft Diameter: 8 : φ8 (Standard); ※635 : φ6.35; ※6 : φ6; ※5 : φ5 ※Option
- Cable Length: 050 : 500mm (Standard); 200 : 2000mm
- Spec No.: 00 : PCD40 Standard; 01 : PCD44 Option; 02 : PCD28 Option

SPEC		For The Multiturn			For The Singleturn
		NAR-H11M-AD	NAR-H13M-AD	NAR-H17M-AD	NAR-H17-AD
●Basic Specifications					
		Rotating Toward Counter Clockwise Viewd from an Arrow			
Resolution	For The Singleturn	2^{11} (2048P/R)	2^{13} (8192P/R)	2^{17} (131072P/R)	
	For The Multiturn	2^{13} (8192) Revolutions		2^{16} (65536) Revolutions	—
	Incremental	2048P/R Z Signal		—	
Respomse Rotational Speed	Main Power Supply	6000r/min			
	Backup Operation	6000r/min			—
Power Source	Main Power Supply	DC5V			
	Backup Operation	DC3.6V			—
Current Consumption		120mA or Less			100mA or Less
Current Consumption for External Battery Use		30μA or Less			—
Holding Moment on Internal Capaciter		More than 3.5 hours			—
Operating Temp. Range		−20℃～+85℃			
Storage Temp. Range		−20℃～+85℃			
●Mechanical Specification					
Moment of Inertia		8×10^{-7}kg·m^2			
Maximum Augural Acceleration		1×10^5rad/s^2			
Maximum Shaft Loading	Radial	29.4N			
	Thrust	9.8N			
●Communication Specification					
Transmisson Standard		EIA Standard Based RS-422A		EIA Standard Based RS-485A	
Transmisson Method		Manchester Coded Modulation Transmission		NRZ Code Serial Communication	
Band Rate		1Mbps		2.5Mbps	
Number of Wires for Output Signals		14		4 (Other Spec 6)	
Receiving Modem		RSA103 (Made by Mitsubishi Cable Industries, LTD.)		Costom Receiver LSI RAS101 for 4 axes RAS102 for 1 axis	

※Ask our Sales Organization for Detailed Explanation.

External Dimension

00

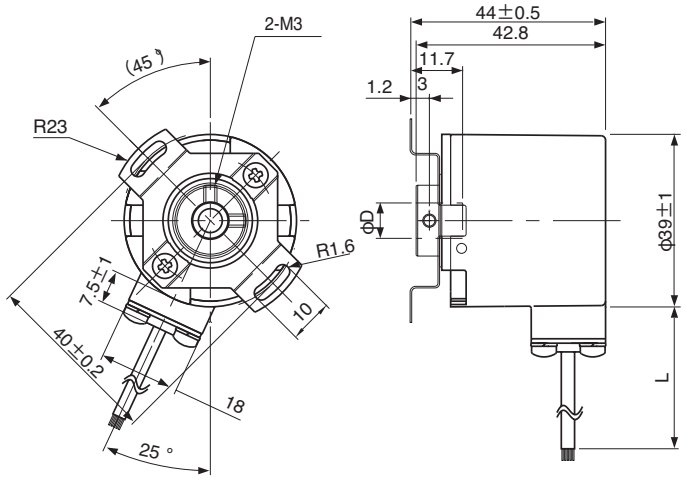

Thrust Play ±0.2

Shaft size No	ϕD	ϕd
8	8H7	8g6
635	6.35H7	6.35g6
6	6H7	6g6
5	5H7	5g6

Option

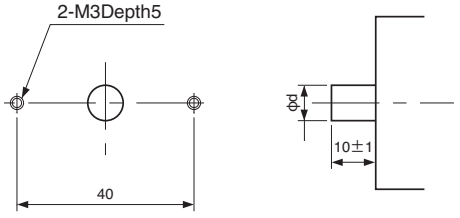

[Setting Diameter]

01

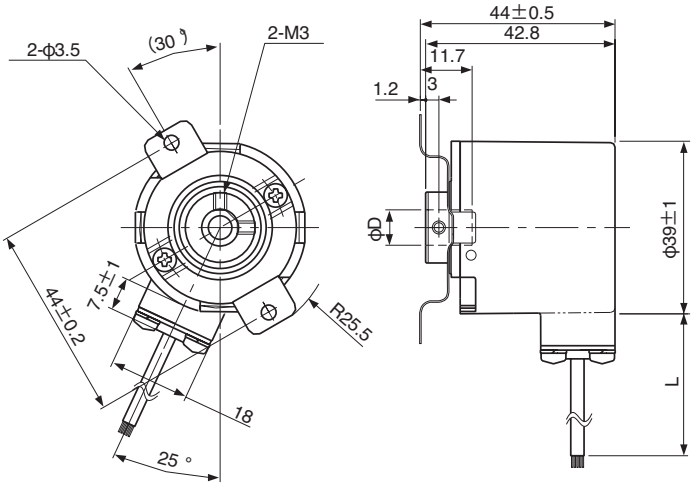

Thrust Play ±0.2

Shaft size No	ϕD	ϕd
8	8H7	8g6
635	6.35H7	6.35g6
6	6H7	6g6
5	5H7	5g6

Option

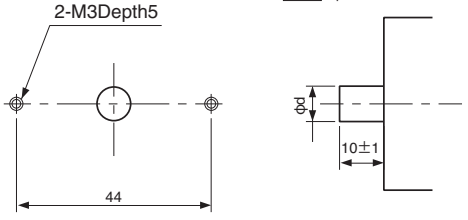

[Setting Diameter]

02

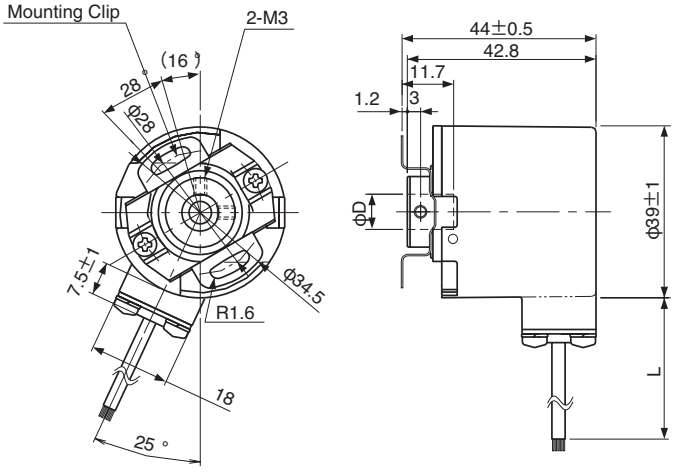

Thrust Play ±0.2

Shaft size No	ϕD	ϕd
8	8H7	8g6
635	6.35H7	6.35g6
6	6H7	6g6
5	5H7	5g6

Option

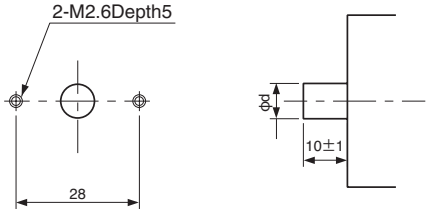

[Setting Diameter]